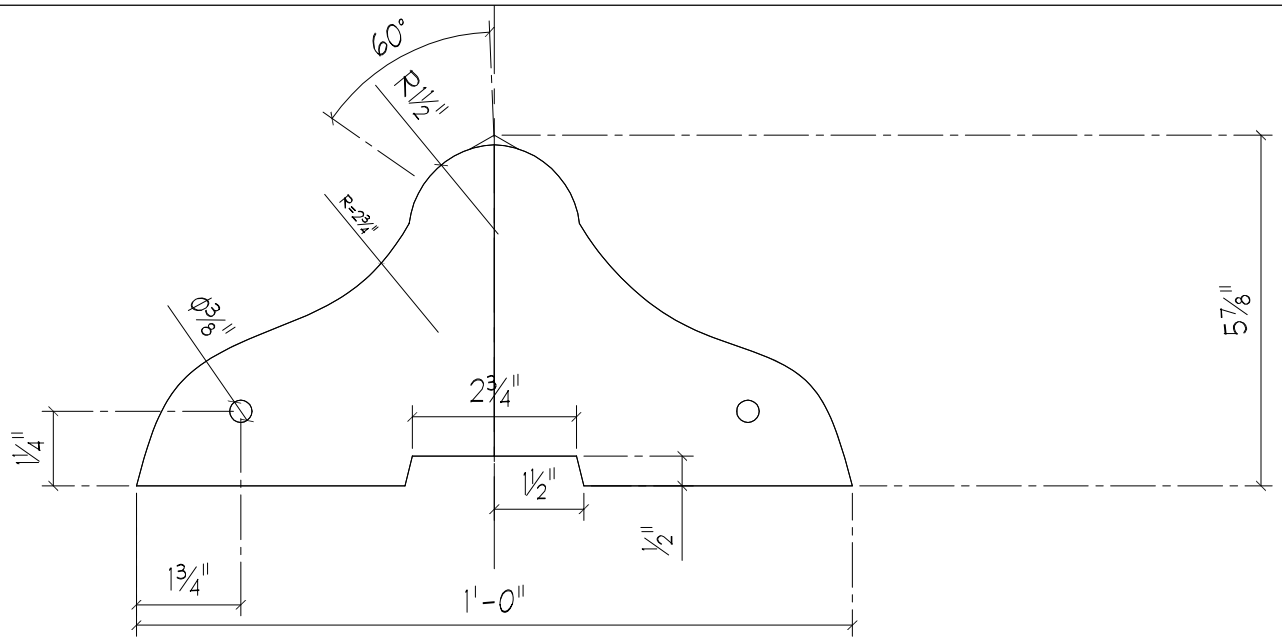

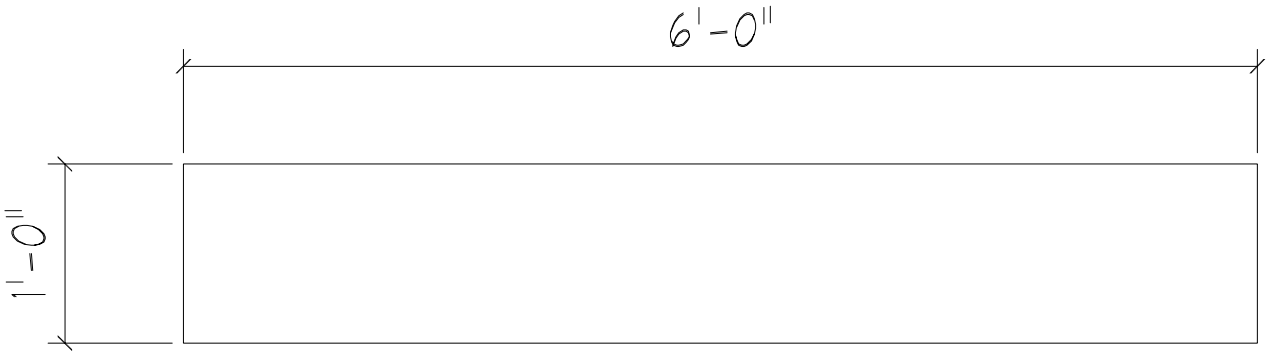

Date	Copies	For	No.	Date	Description	Date	Copies	For	No.	Date	Description
Prints			Revisions			Prints			Revisions		

Contractor: ####
Address: ####
Phone: #### Fax: ####
Job Site: ####
Address: ####
Phone: #### Fax: ####
General

OLYMPIAN PRECAST, INC.

P.O. BOX 539
REDMOND, WA 98073-0539
PHONE 425.868.1922, FAX 425.868.1400

www.olyprecast.com

Description: ####
Project: ####
Location: ####
Job no. ####

DRAWN BY ####
PROJECT MANAGER ####
SHEET C CURB

\\WINE8SERVER\Estimating\Marketing\CAD # P2P\CURB\NOSING\CURB\NOSING.dwg_ 12/14/2011 11:23 AM